TURBO-SEAL®

HIGH PERFORMANCE ROLLING DOOR

The World's Fastest, Low Profile Break-Away Door.

Where traffic patterns near the doorway are tight and speed is critical, the Turbo-Seal ultra high-speed door is your best solution. Such situations tend to create greater potential for doors to get hit because of the relatively short approach to the door, which in some cases forces equipment to enter the door at an angle. The extra speed (up to 100 inches per second) offered by the Turbo-Seal minimizes that potential by getting the door out of the way faster. And even if it does get hit, it can be reset without tools in just seconds.

Fast – Opens at up to 100 inches per second.

Safe – Dual electric photo eyes and pneumatic, dual-chamber reversing edge in bottom bar are standard. Optional, replaceable windows for visibility. Optional light curtain system available.

Takes a Hit – Quick-Set™, Break-Away™ tabs allow bottom bar to be reset in just seconds, without tools, virtually eliminating downtime and repair costs.

Low Profile – Side columns are only 8 inches wide with 6 inches of projection. Fits virtually anywhere.

Low Maintenance – Dual guided counterweights ensure smooth, maintenance-free operation.

Easy Installation – Modular construction and pre-wiring allow for quick installation.

RYTEC CORPORATION

Driving The Door Industry.℠

TURBO-SEAL®

HIGH PERFORMANCE ROLLING DOOR

Specifications: Subject to change

Model: Rytec® Turbo-Seal® Door

Standard Size: Up to 12 feet wide by 16 feet high.

Door Panel: 2-ply, 3-ply Rilon™ or USDA compliant material with optional, replaceable PVC windows. Optional wind ribs provide stability in high negative pressure environments. Contact factory for color options.

Side Frames: Fully bolt together, reinforced side frames with full-height vinyl weatherseal to seal against panel material. Dual electric photo eyes are standard. Optional light safety curtain is available

Counterbalance: Dual guided counterweights custom-sized to provide high-speed operation with less stress on the drive system.

Bottom Bar: Quick-Set, Break-Away extruded aluminum bottom bar capable of releasing in either direction without damage to the door. Opening of side covers is not required to reset bottom bar. Pneumatic, dual-chamber reversing edge standard on bottom bar. Standard dual cut-off switches shut off motor when bottom bar is impacted. No exposed junction box on bottom bar. Vinyl loop hugs floor contour for tight seal. Optional padded bottom bar available.

Drive System: Three-phase, variable speed AC Drive provides soft acceleration and deceleration. Independent opening and closing speeds provide flexibility to meet any application.

Electrical Controls: System 3® controller housed in a NEMA 4 rated enclosure with factory set parameters. Self-diagnostic features and a two-line, 32-character LCD display in English, French or Spanish provide quick and straightforward installation and control adjustments. Programmable inputs and outputs accommodate special control requirements without the need for additional electrical components.

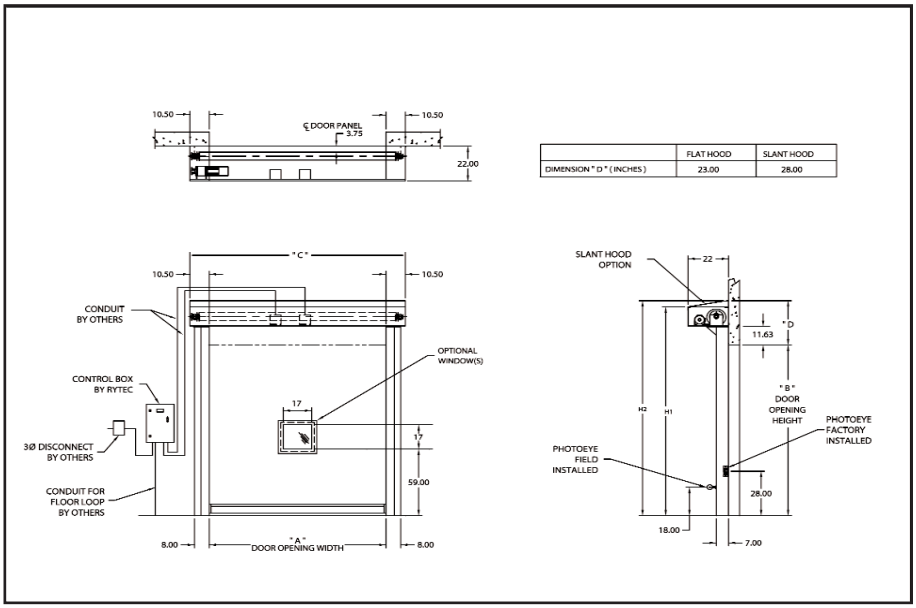

	FLAT HOOD	SLANT HOOD
DIMENSION "D" (INCHES)	23.00	28.00

▲ **System 3 Controller**
Makes programming and troubleshooting easier, more flexible and more precise than ever.

▲ **Easy to Reset**
Quick-Set, Break-Away tabs allow bottom bar to be reset in just seconds, without tools, after taking a hit. Cut off switch between tabs deactivates motor when door is hit.

Counterbalance System ▶
Guided counterweight design eliminates stress and strain on the motor.

Travel Speed: Opens at up to 100 inches per second.

Warranty: One-year limited warranty on materials and workmanship. Lifetime warranty on door counterweights. Three-year limited warranty on 2-ply Rilon panel material.

RYTEC CORPORATION

One Cedar Parkway
Jackson, WI 53037-0403
Phone: 262-677-9046
Fax: 262-677-2058
Toll Free: 888-GO-RYTEC
Email: info@rytecdoors.com
Web: www.rytecdoors.com

© Rytec Corporation A0408